LINCOLN COUNTY BOARD OF PUBLIC UTILITIES

Lincoln County, Tennessee

ELK RIVER RAW WATER INTAKE

Project Engineer

LOCATION MAP

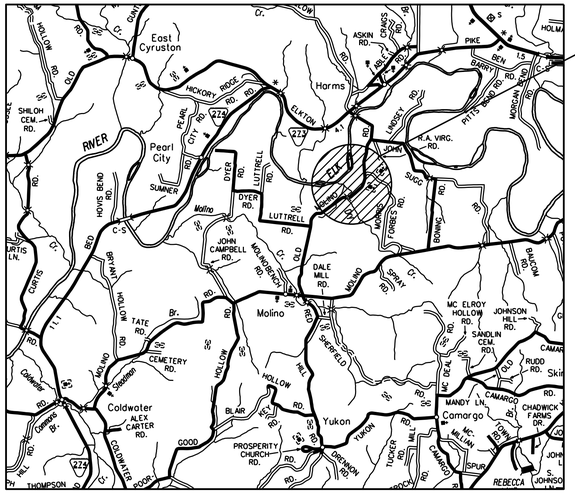

PROJECT LOCATION

PLANS REVIEWED AND APPROVED BY LINCOLN COUNTY BOARD OF PUBLIC UTILITIES

_____ _____

DATE

SHEET INDEX

COVER SHEET	
RAW WATER INTAKE - SITE PLAN	SP-1
RAW WATER INTAKE - SITE PROFILE	SP-2
RAW WATER INTAKE - YARD PIPING	YP-3
RAW WATER INTAKE - ELEVATIONS	A-4
RAW WATER INTAKE - ELEVATIONS	A-5
RAW WATER INTAKE - PLAN VIEW	A-6
RAW WATER INTAKE - PLAN VIEW	A-7
RAW WATER INTAKE - SECTIONS	A-8
RAW WATER INTAKE - SECTIONS	A-9
MISCELLANEOUS DETAILS	D-10
EROSION CONTROL PLAN	EC-11

SET NUMBER _____

JCH PROJECT NO. 07334

JAMES C. HAILEY & CO. 7518 HWY 70, S - SUITE 100 NASHVILLE, TENNESSEE

PHONE: 615-883-4933 FAX: 615-883-4937 http://www.jchengr.com

07334 - LCBPU - ELK RIVER - RAW WATER INTAKE

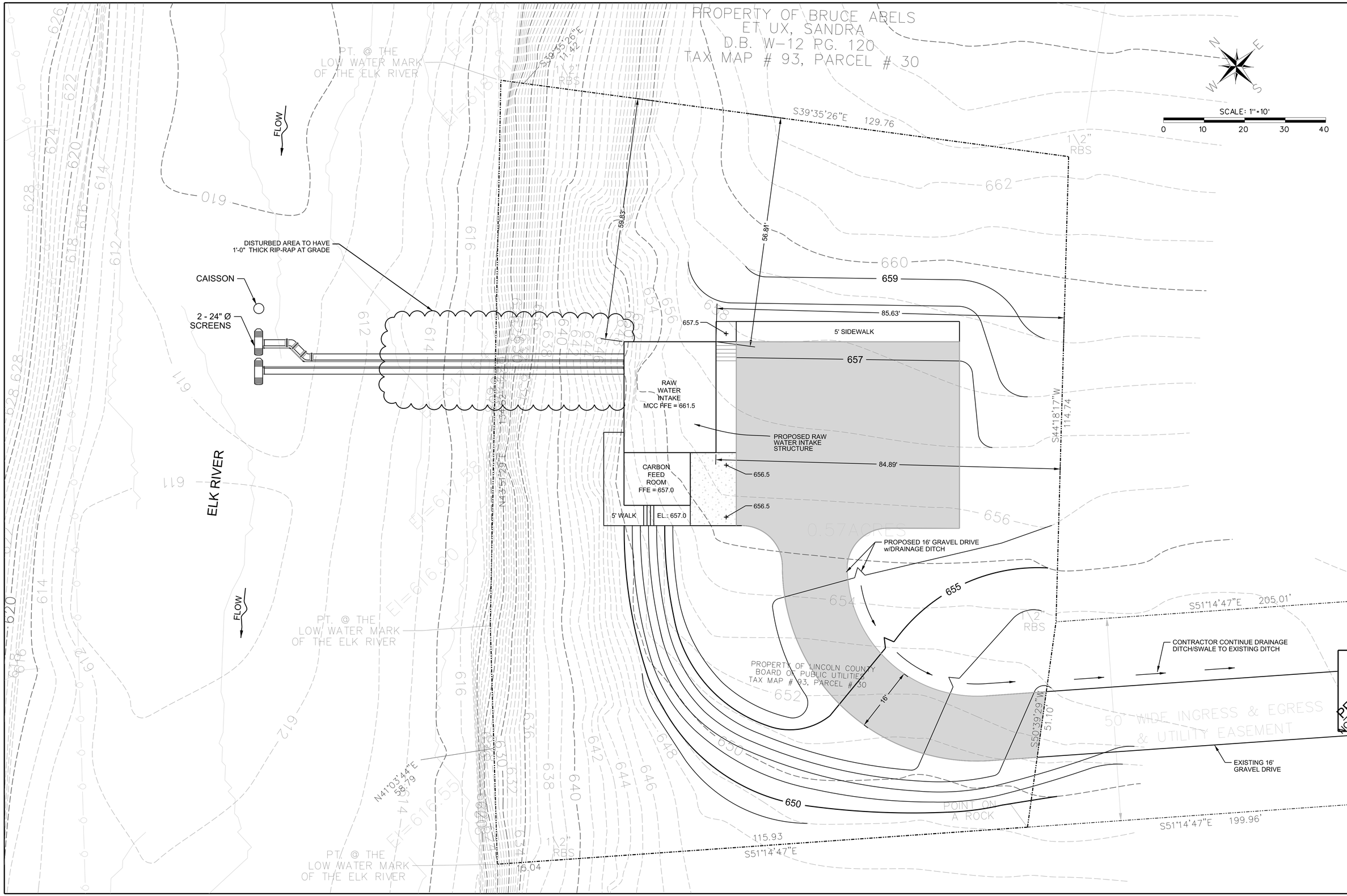

JAMES C. HAILEY & COMPANY
Consulting Engineers
Nashville, Tennessee 37221
PH: 615-883-4933 FAX: 615-883-4937
http://www.jchengr.com

ELK RIVER
RAW WATER INTAKE
SITE/GRADING PLAN

LINCOLN COUNTY BOARD
OF PUBLIC UTILITIES
Lincoln County, Tennessee

PRELIMINARY
NOT FOR CONSTRUCTION

DESIGN	RNW
DRAWN	JAS
CHECKED	RNW
DATE	MAR. 2015
SCALE	1" = 10'
PROJECT NO.	07334
SHEET	SP1

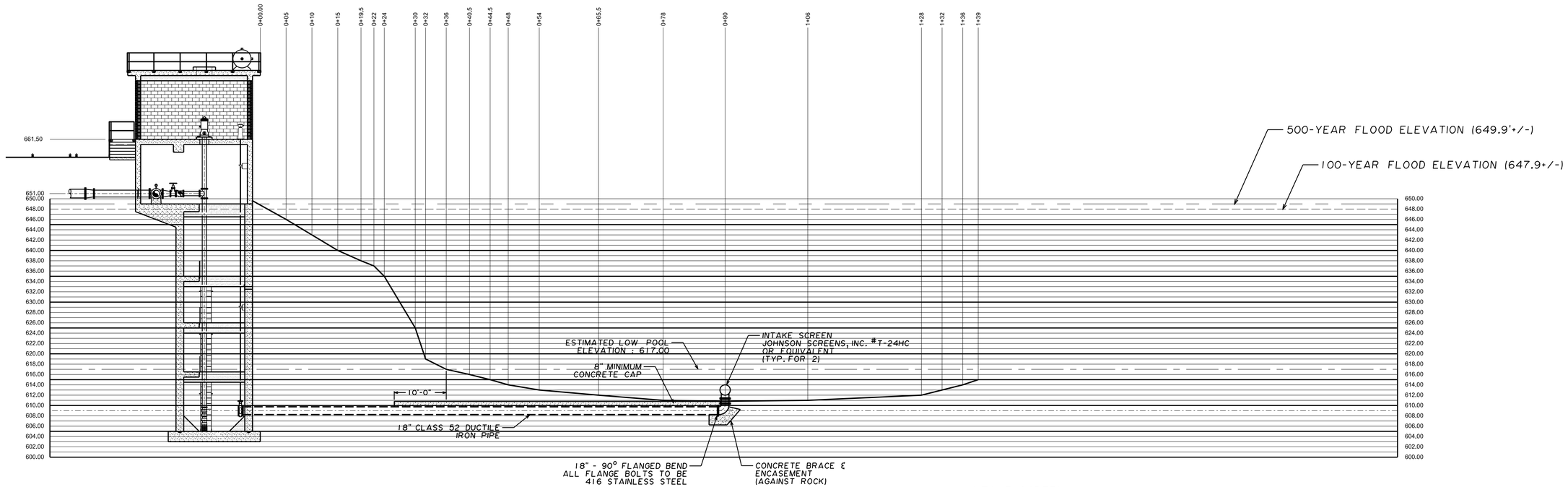

PROFILE

SCALE: 1"=10'-0"

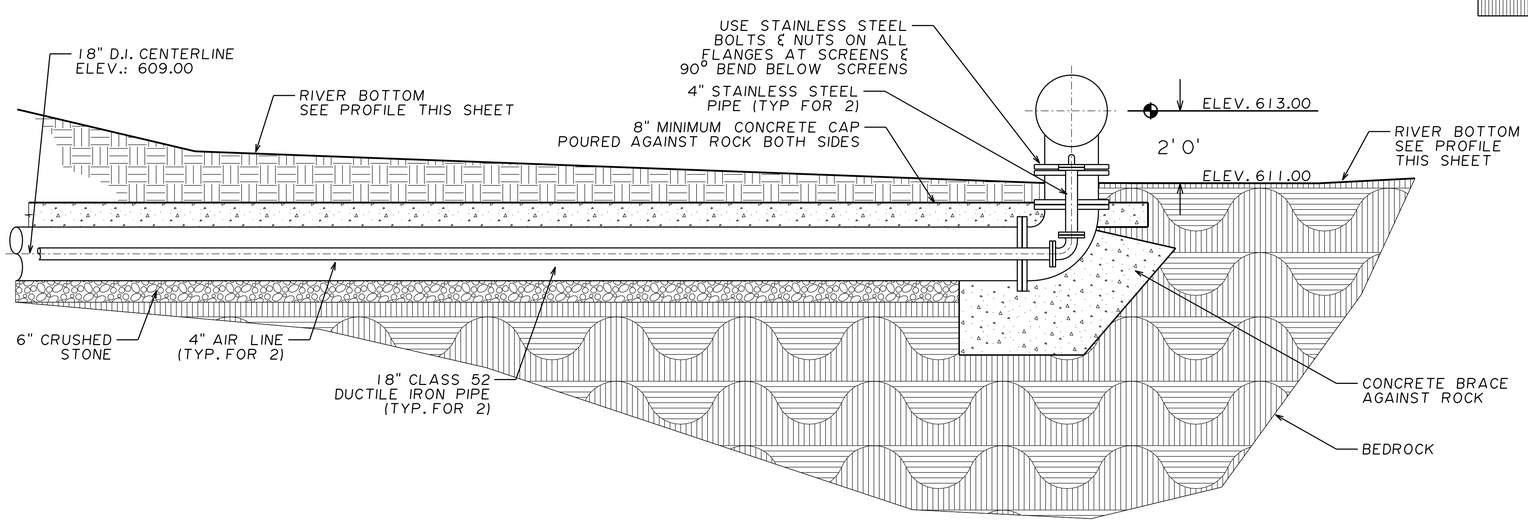

DETAIL AT STA. 0+90.00

SCALE: 1/2"=1'-0"

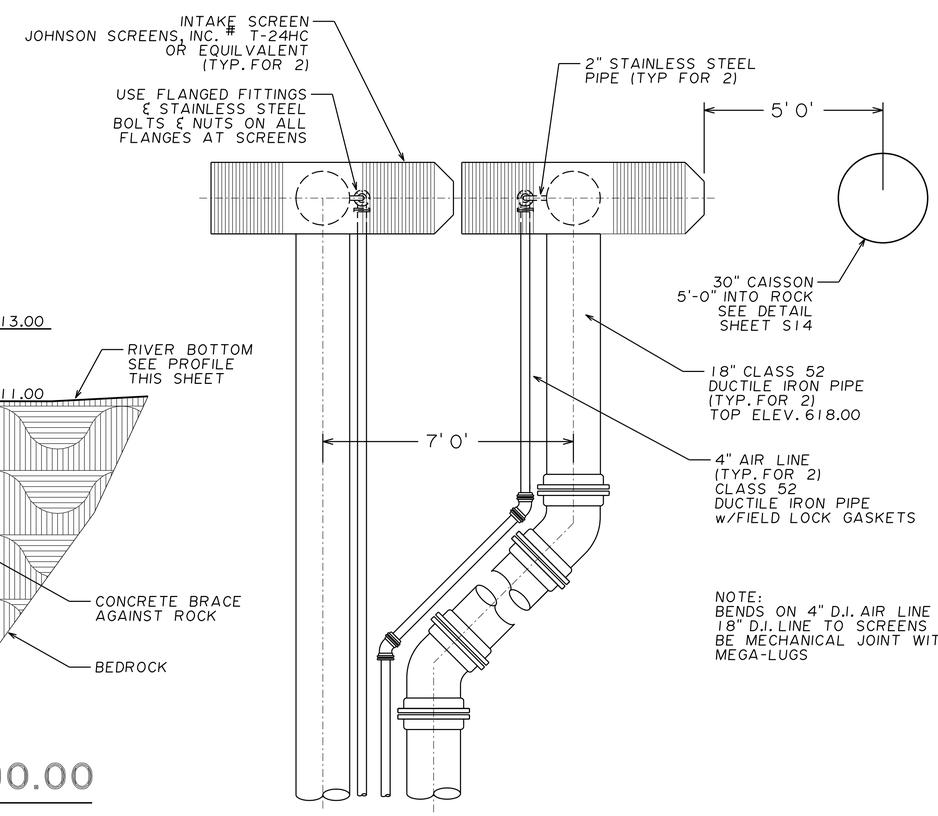

NOTE:
BENDS ON 4" D.I. AIR LINE & 18" D.I. LINE TO SCREENS TO BE MECHANICAL JOINT WITH MEGA-LUGS

JAMES C. HAILEY & COMPANY
Consulting Engineers
Nashville, Tennessee 37221
PH: 615-883-4933 FAX: 615-883-4937
http://www.jchengr.com

RAW WATER INTAKE
SITE PROFILE

LINCOLN COUNTY BOARD
OF PUBLIC UTILTIES
Lincoln County, Tennessee

PRELIMINARY
NOT FOR CONSTRUCTION

DESIGN	RNW
DRAWN	JAS
CHECKED	RNW
DATE	MAR. 2015
SCALE	AS NOTED
PROJECT NO.	07334
SHEET	SP2

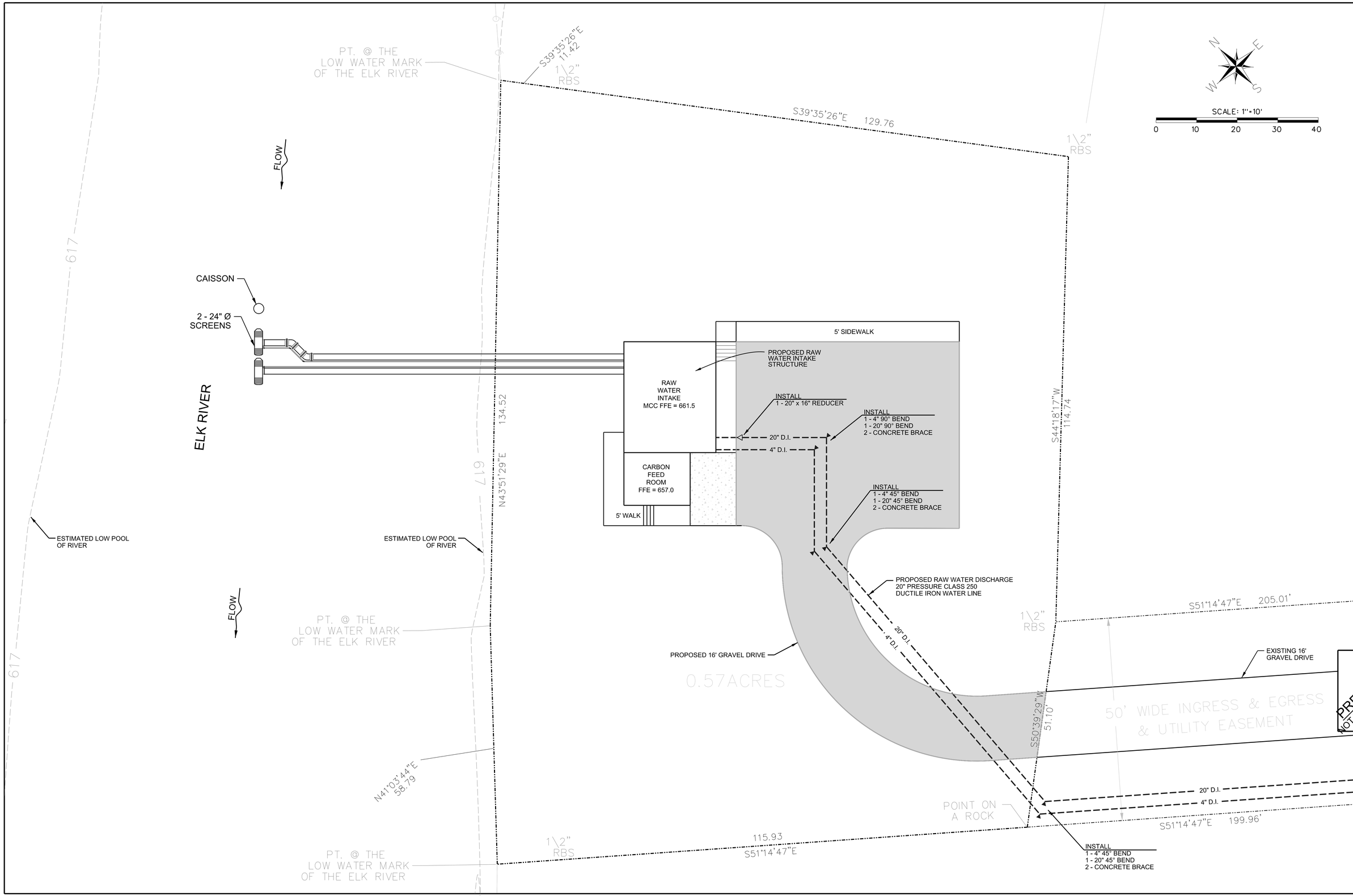

JAMES C. HAILEY & COMPANY
Consulting Engineers
Nashville, Tennessee 37221
PH: 615-883-4933 FAX: 615-883-4937
http://www.jchengr.com

ELK RIVER
RAW WATER INTAKE
YARD PIPING PLAN

LINCOLN COUNTY BOARD
OF PUBLIC UTILITIES
Lincoln County, Tennessee

PRELIMINARY
NOT FOR CONSTRUCTION

DESIGN	RNW
DRAWN	JAS
CHECKED	RNW
DATE	MAR. 2015
SCALE	1" = 10'
PROJECT NO.	07334
SHEET	YP3

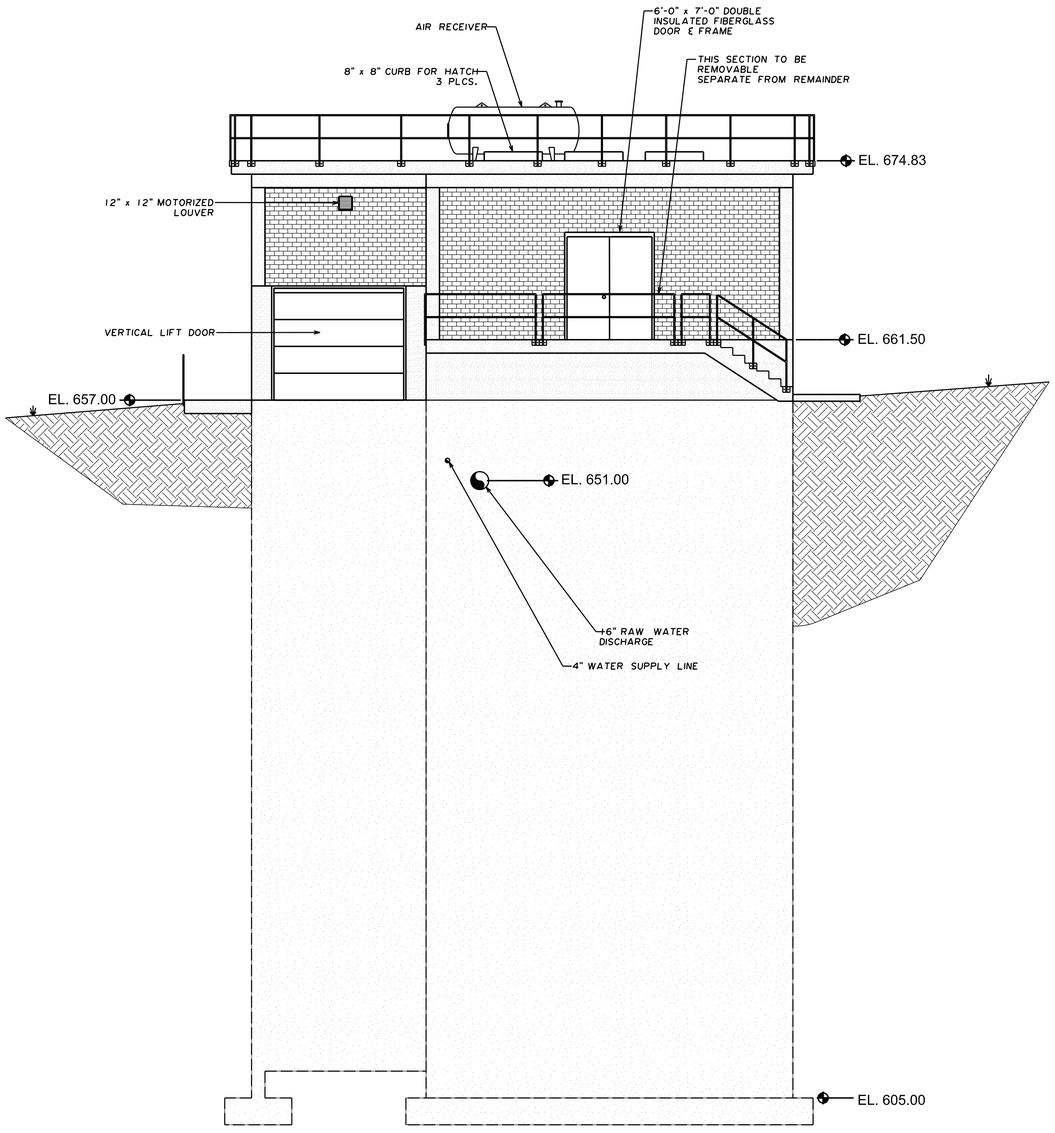

FRONT ELEVATION

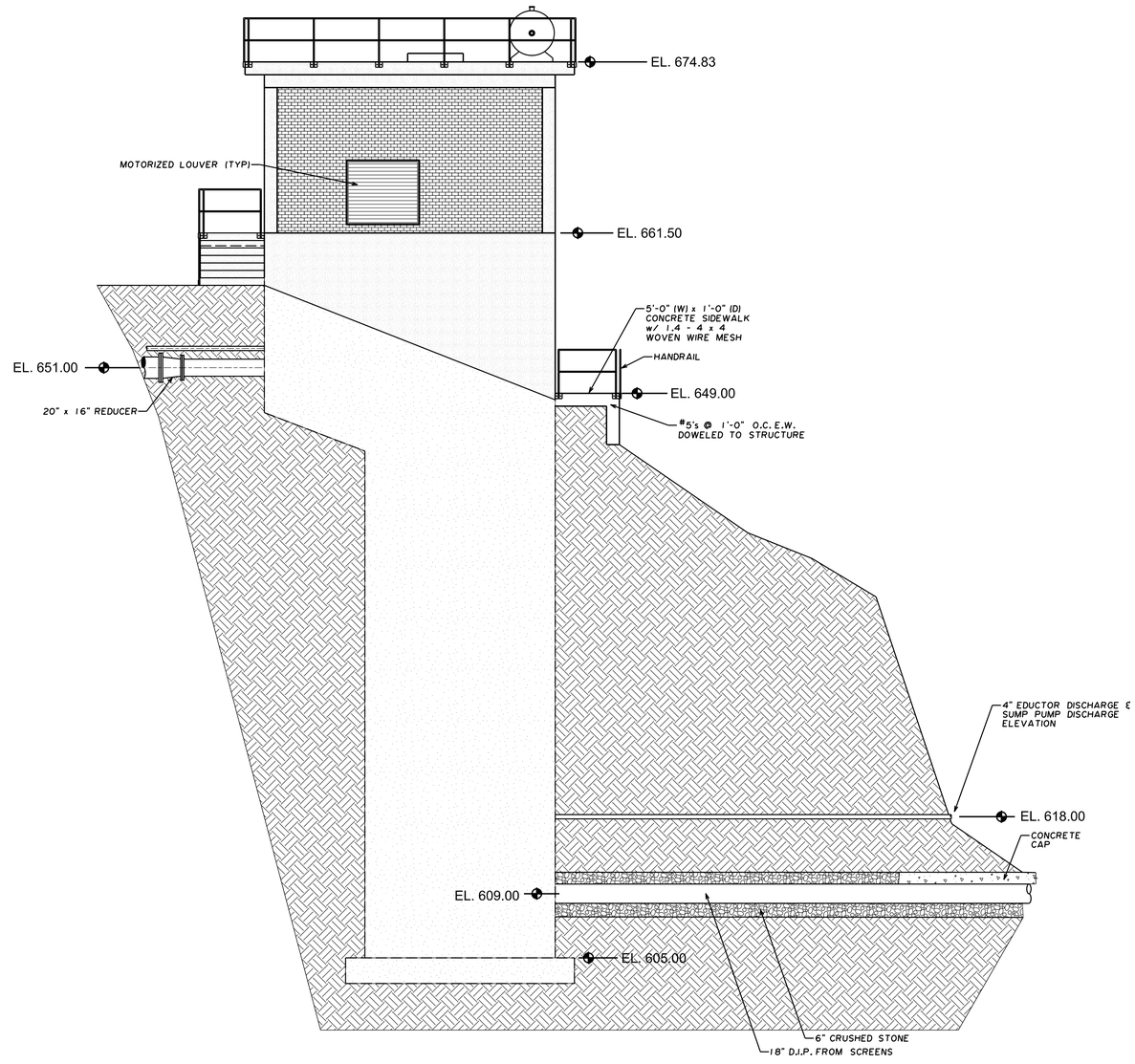

RIGHT END ELEVATION

JAMES C. HAILEY & COMPANY
Consulting Engineers
Nashville, Tennessee 37221
PH: 615-883-4933 FAX: 615-883-4937
http://www.jchengr.com

ELK RIVER
RAW WATER INTAKE
ELEVATIONS

LINCOLN COUNTY BOARD
OF PUBLIC UTILITIES
Lincoln County, Tennessee

PRELIMINARY
NOT FOR CONSTRUCTION

DESIGN	RNW
DRAWN	JAS
CHECKED	RNW
DATE	MAR. 2015
SCALE	3/16"=1'-0"
PROJECT NO.	07334
SHEET	A4

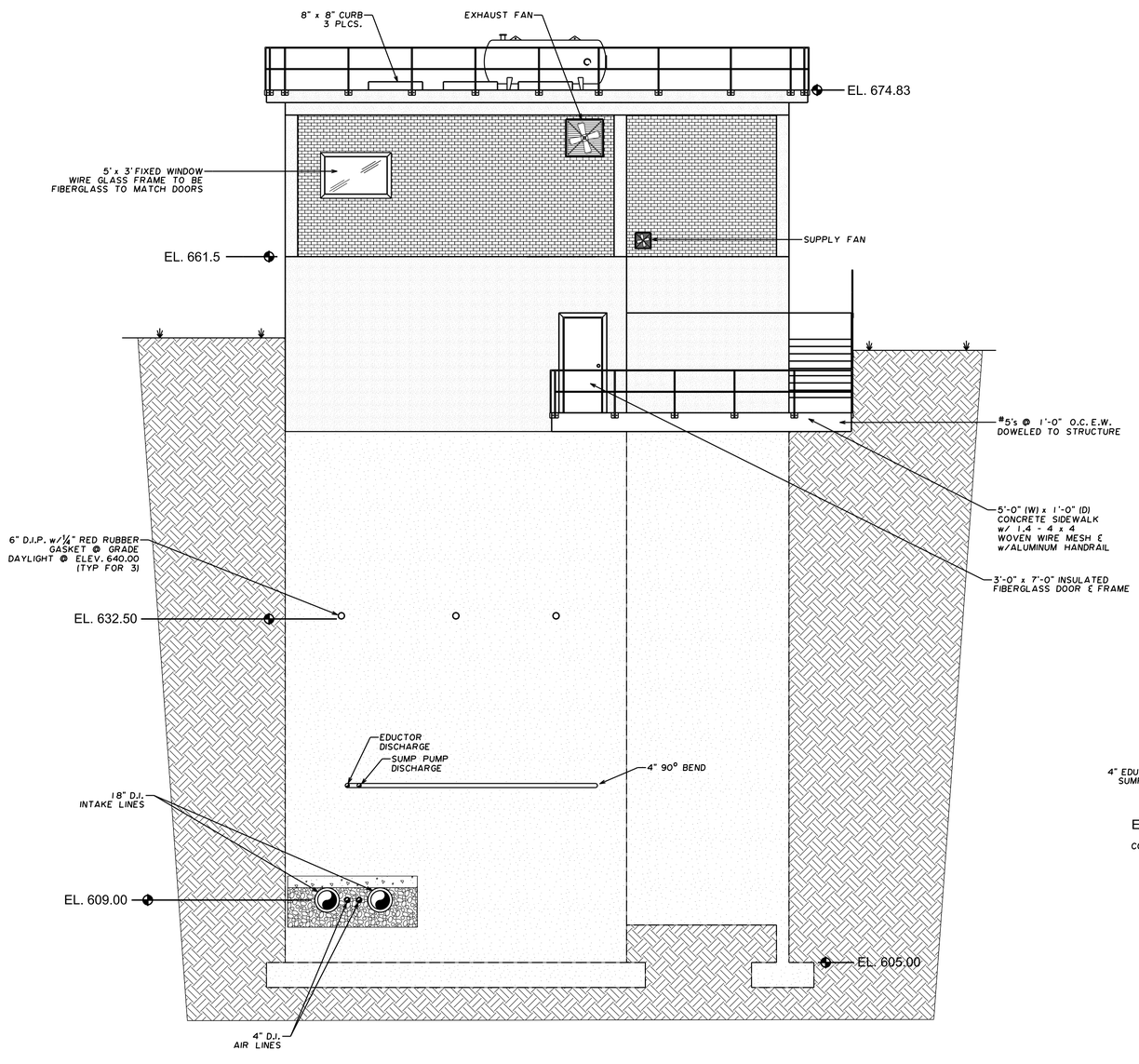

REAR ELEVATION

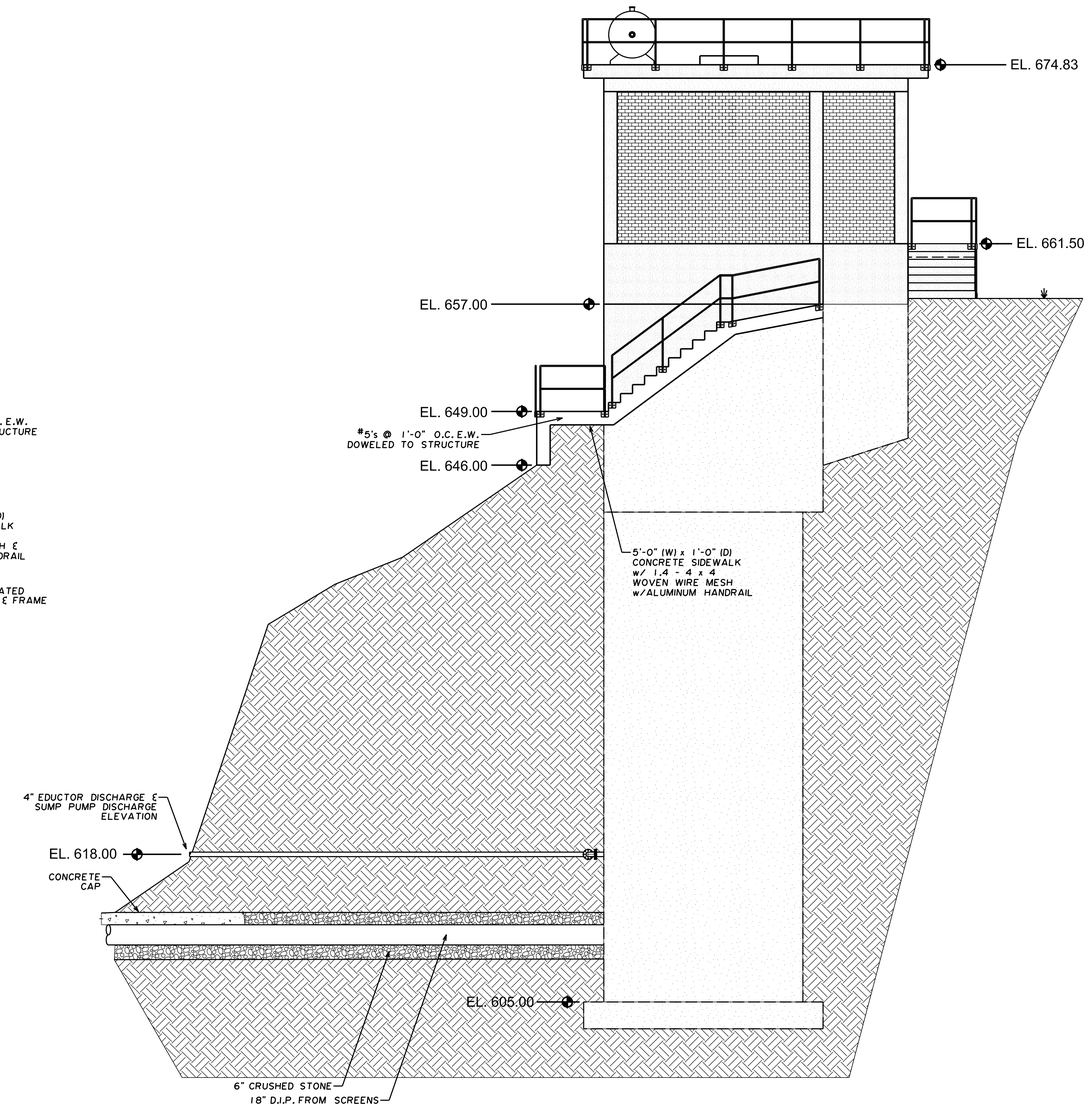

RIGHT END ELEVATION

JAMES C. HAILEY & COMPANY
Consulting Engineers
Nashville, Tennessee 37221
PH: 615-883-4933 FAX: 615-883-4937
http://www.jchengr.com

ELK RIVER
RAW WATER INTAKE
ELEVATIONS

LINCOLN COUNTY BOARD
OF PUBLIC UTILITIES
Lincoln County, Tennessee

PRELIMINARY
NOT FOR CONSTRUCTION

DESIGN	RNW
DRAWN	JAS
CHECKED	RNW
DATE	MAR. 2015
SCALE	3/16"=1'-0"
PROJECT NO.	07334
SHEET	A5

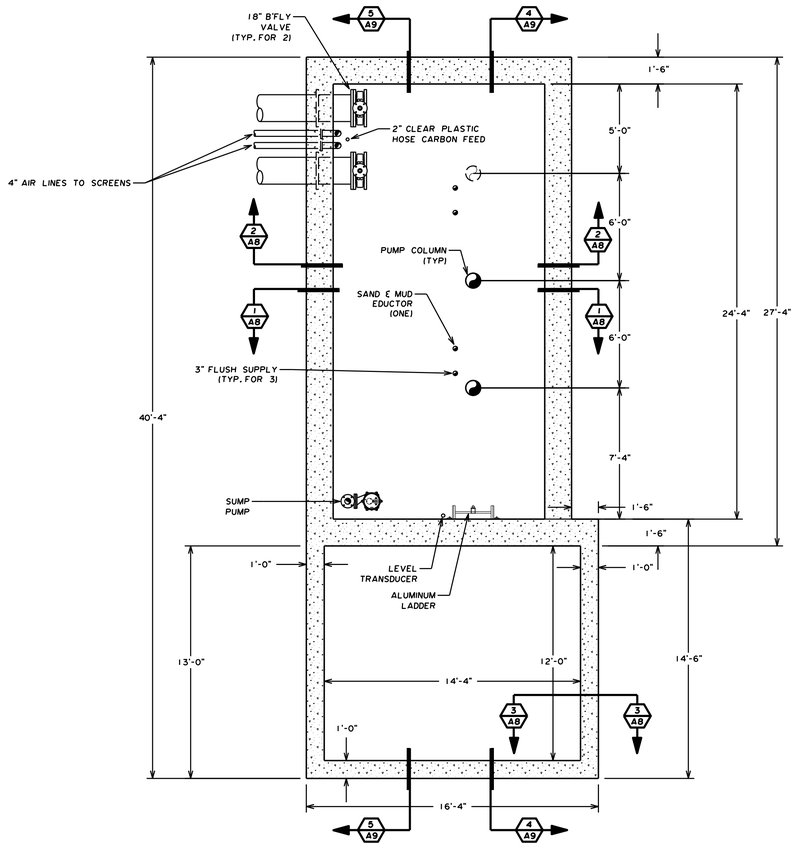

PLAN AT EL. 605.00

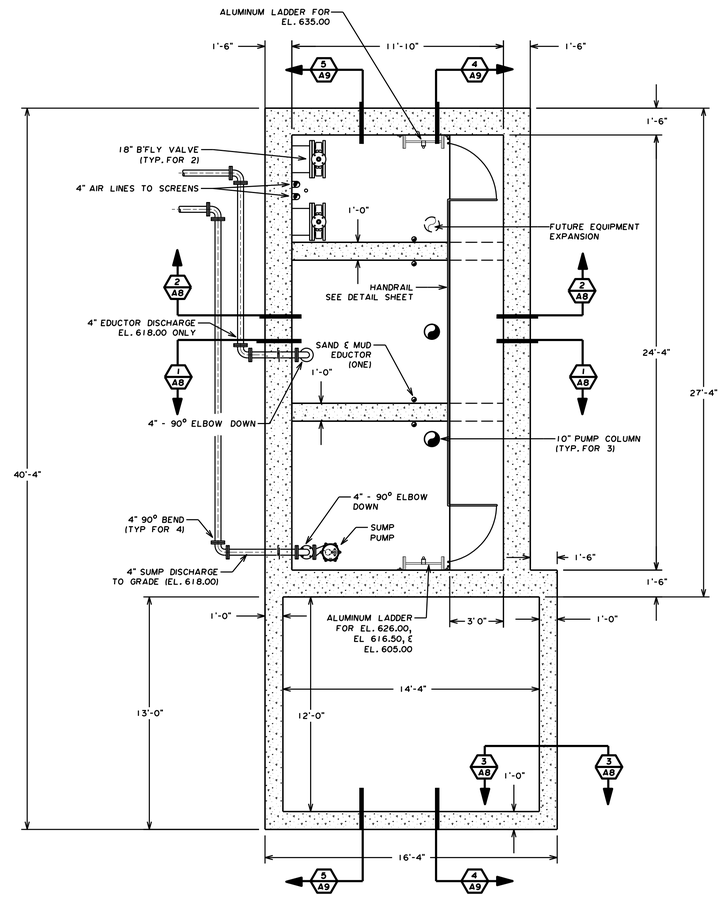

PLAN AT EL. 616.50, EL. 626.00 & EL. 635.00

JAMES C. HAILEY & COMPANY
Consulting Engineers
Nashville, Tennessee 37221
PH: 615-883-4933 FAX: 615-883-4937
http://www.jchengr.com

ELK RIVER
RAW WATER INTAKE
PLAN & SECTION CUTS

LINCOLN COUNTY BOARD
OF PUBLIC UTILTIES
Lincoln County, Tennessee

PRELIMINARY
NOT FOR CONSTRUCTION

DESIGN	RNW
DRAWN	JAS
CHECKED	RNW
DATE	MAR. 2015
SCALE	1/4"=1'-0"
PROJECT NO.	07334
SHEET	A6

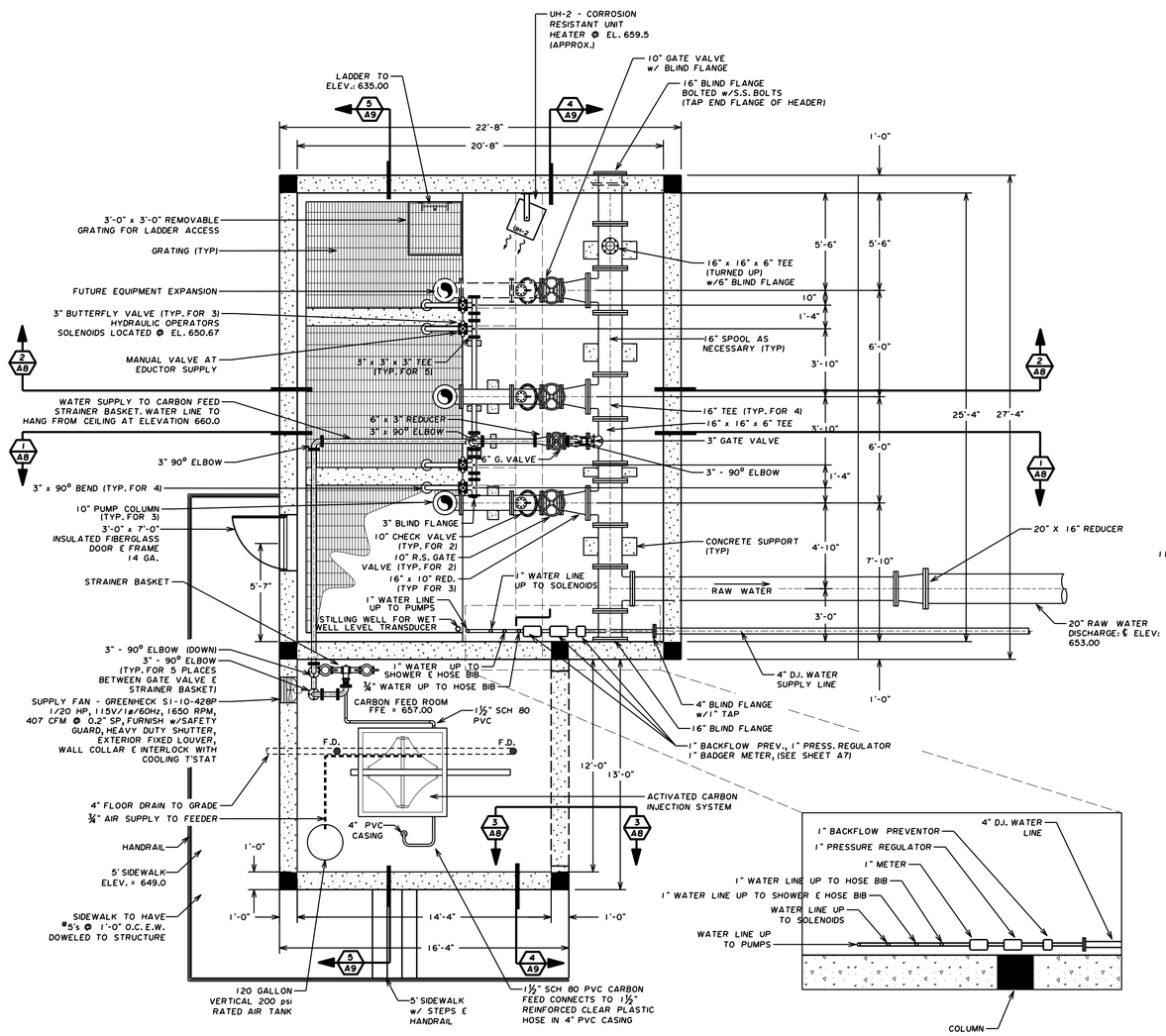

PLAN AT EL. 649.00

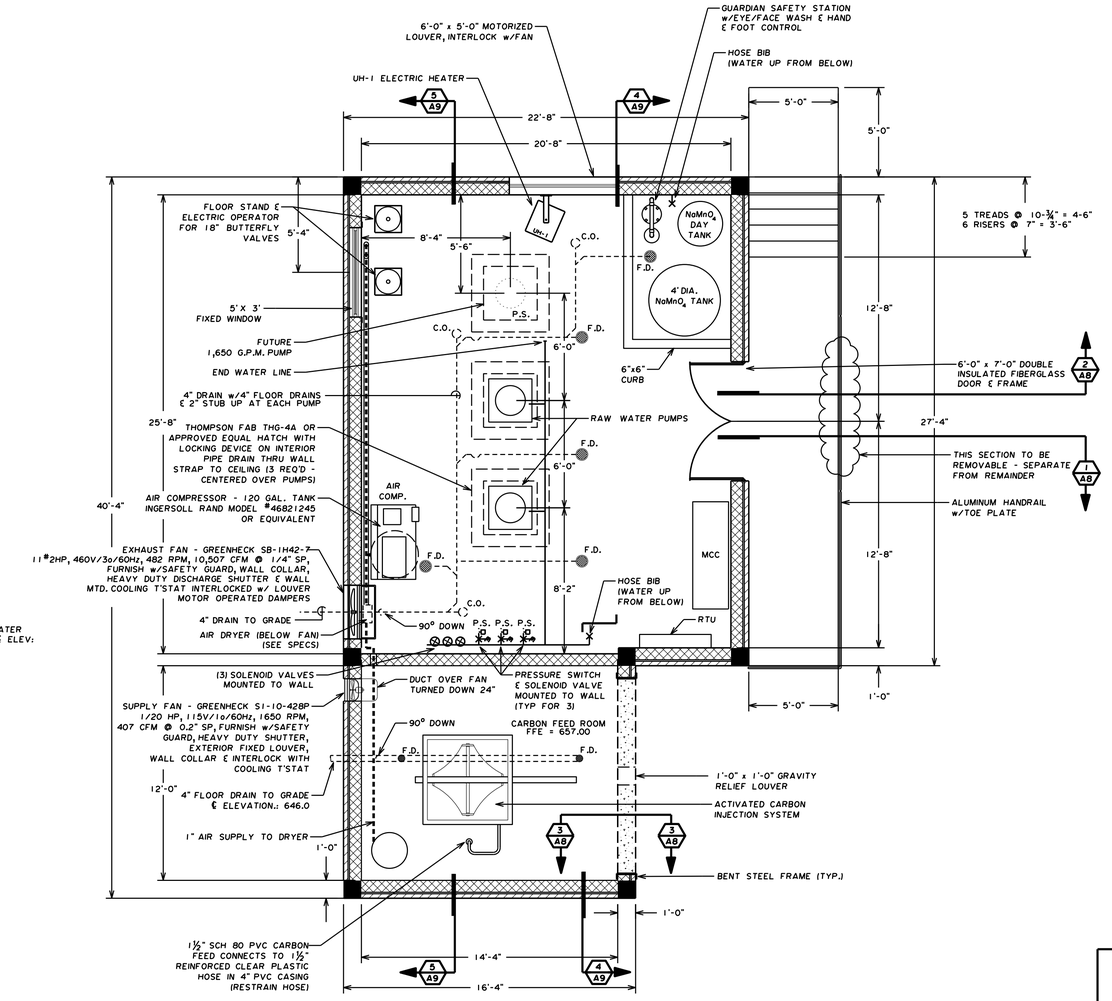

PLAN AT EL. 661.50

JAMES C. HAILEY & COMPANY
Consulting Engineers
Nashville, Tennessee 37221
PH: 615-883-4933 FAX: 615-883-4937
http://www.jchengr.com

ELK RIVER
RAW WATER INTAKE
PLAN

LINCOLN COUNTY BOARD
OF PUBLIC UTILTIES
Lincoln County, Tennessee

PRELIMINARY
NOT FOR CONSTRUCTION

DESIGN	RNW
DRAWN	JAS
CHECKED	RNW
DATE	MAR. 2015
SCALE	1/4"=1'-0"
PROJECT NO.	07334
SHEET	A7

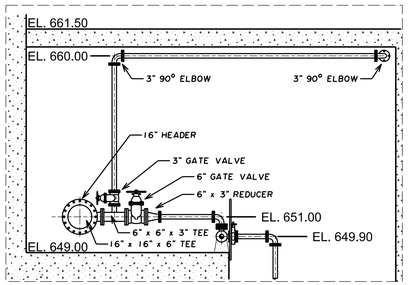

3" WATER SUPPLY TO CARBON FEED ROOM LAYOUT DETAIL

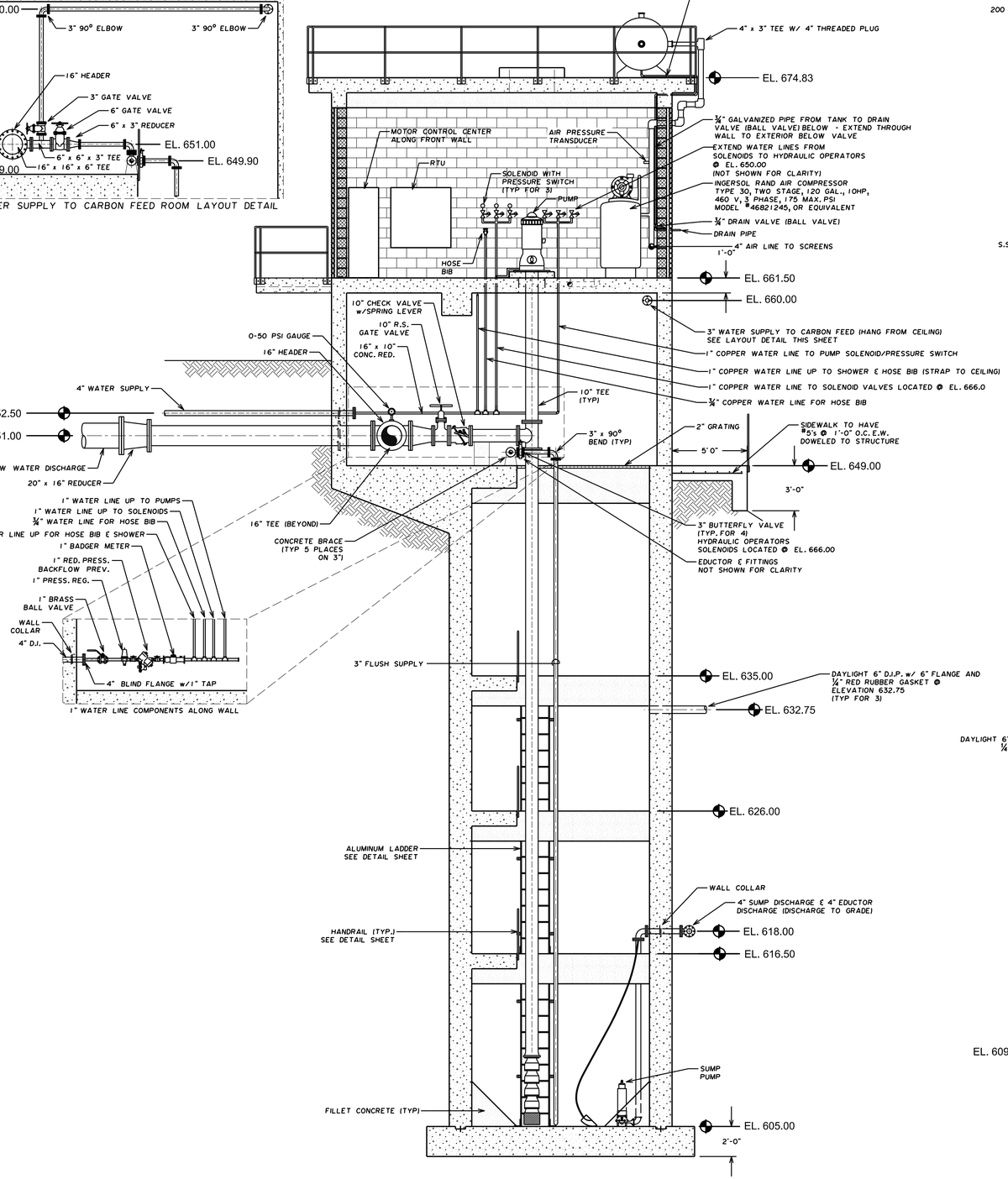

SECTION 1 A6.7

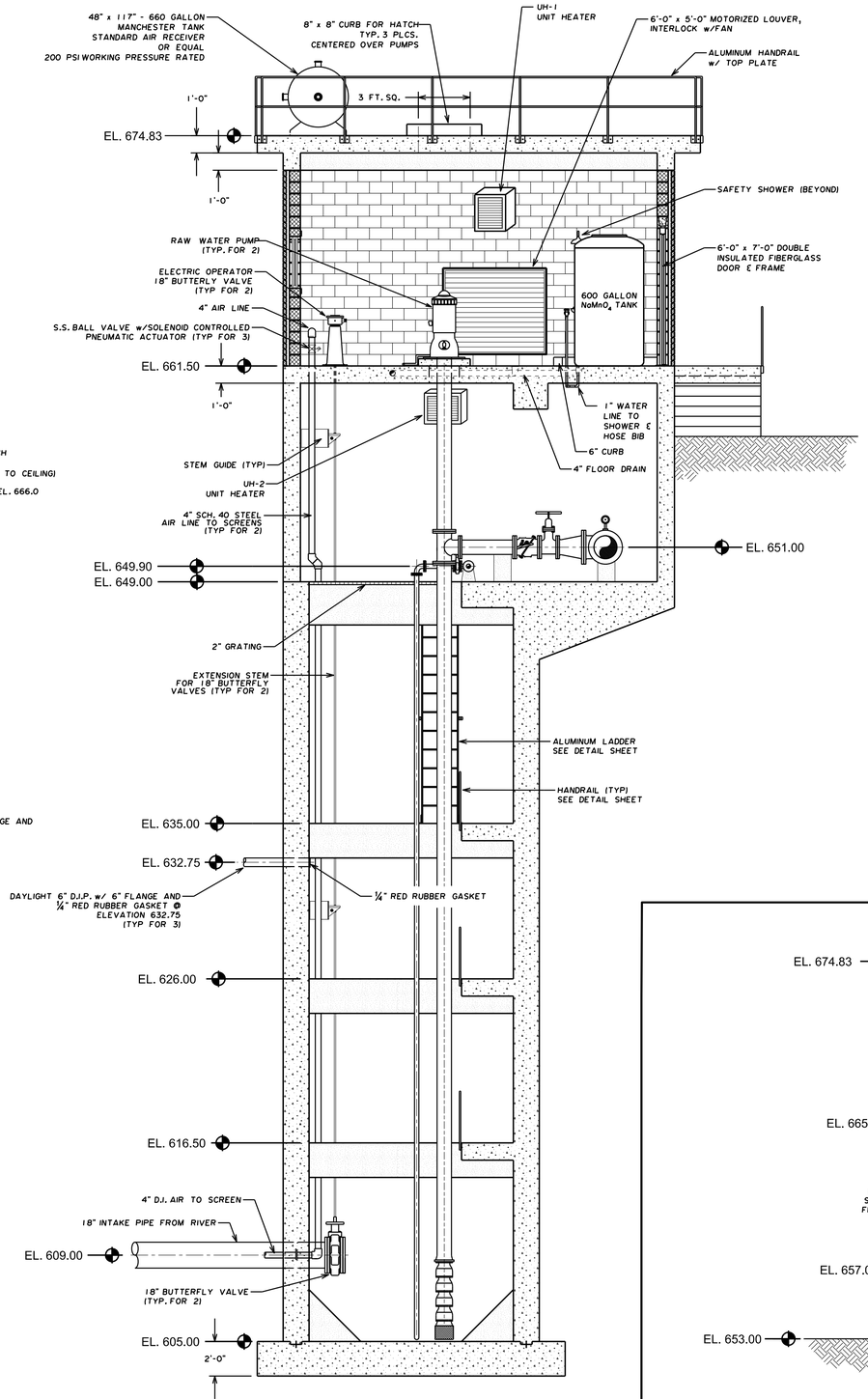

SECTION 2 A6.7

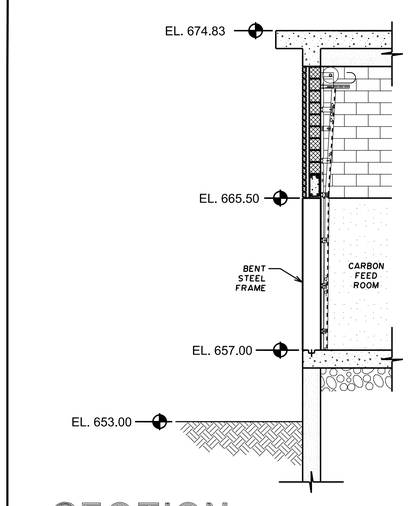

SECTION 3 A6.7

JAMES C. HAILEY & COMPANY
Consulting Engineers
Nashville, Tennessee 37221
PH: 615-883-4933 FAX: 615-883-4937
http://www.jchengr.com

RAW WATER INTAKE SECTIONS

LINCOLN COUNTY BOARD OF PUBLIC UTLITIES
Lincoln County, Tennessee

PRELIMINARY NOT FOR CONSTRUCTION

DESIGN	RNW
DRAWN	JAS
CHECKED	RNW
DATE	MAR. 2015
SCALE	1/4"=1'-0"
PROJECT NO.	07334
SHEET	A8

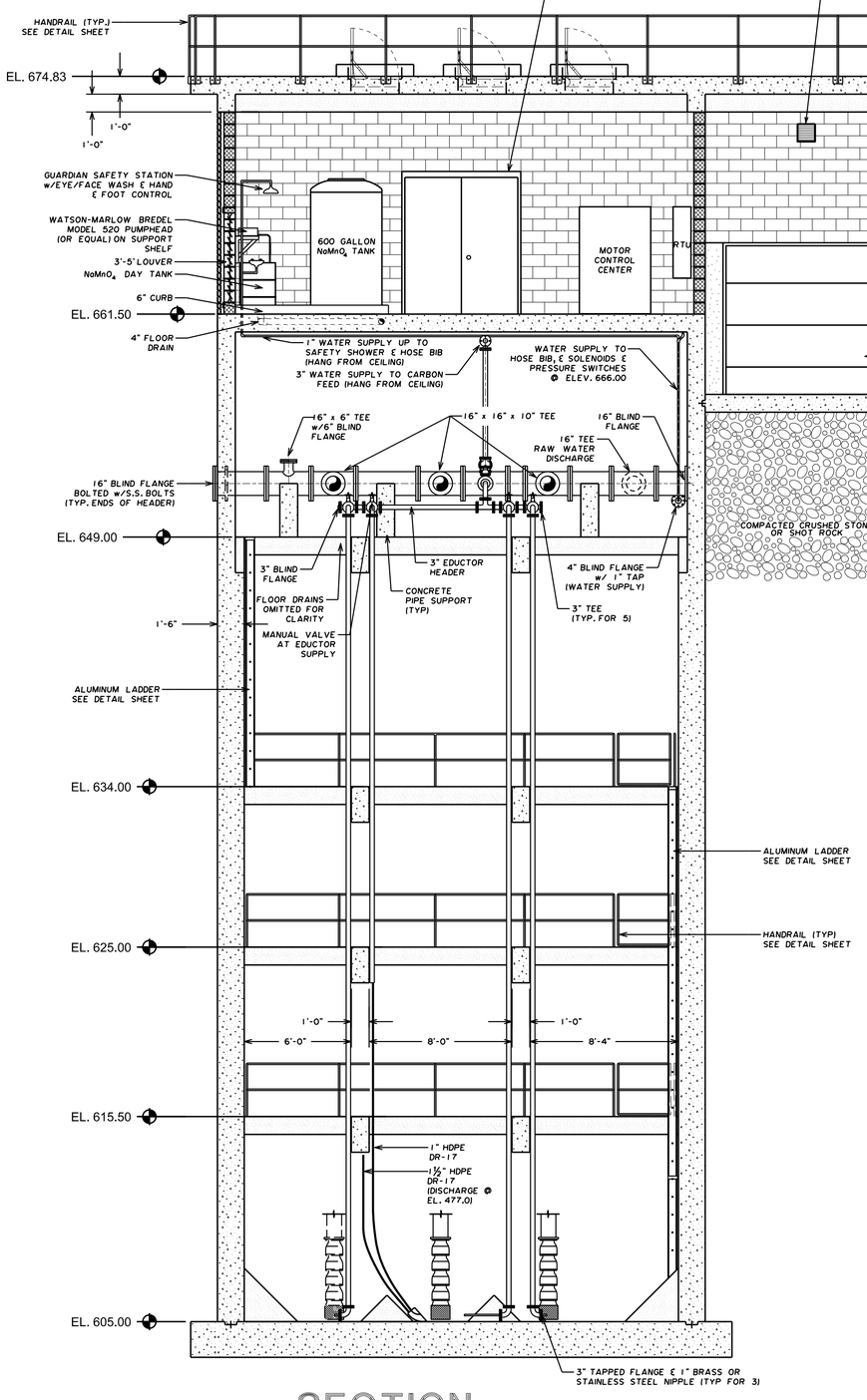

SECTION 4 A6.7

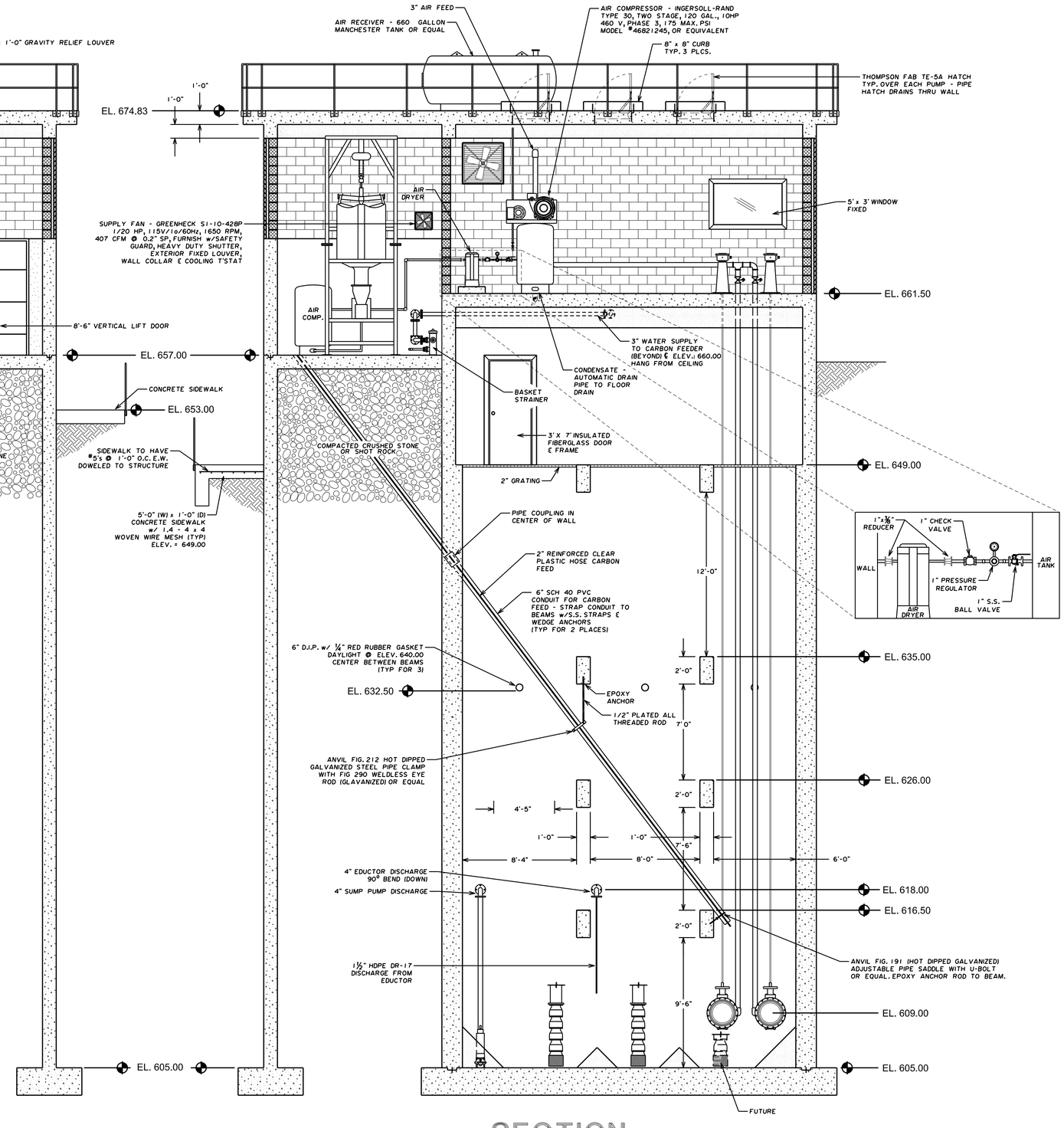

SECTION 5 A6.7

JAMES C. HAILEY & COMPANY
Consulting Engineers
Nashville, Tennessee 37221
PH: 615-883-4933 FAX: 615-883-4937
http://www.jchengr.com

RAW WATER INTAKE SECTIONS

LINCOLN COUNTY BOARD OF PUBLIC UTILITIES
Lincoln County, Tennessee

PRELIMINARY NOT FOR CONSTRUCTION

DESIGN	RNW
DRAWN	JAS
CHECKED	RNW
DATE	MAR. 2015
SCALE	1/4"=1'-0"
PROJECT NO.	07334
SHEET	A9

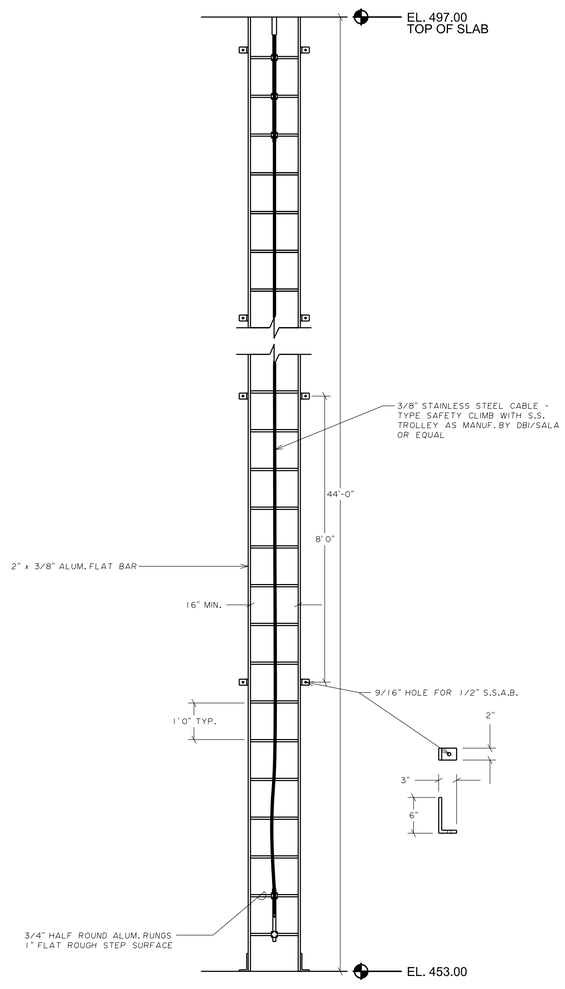

LADDER DETAIL

SCALE: 1/2"=1'-0"

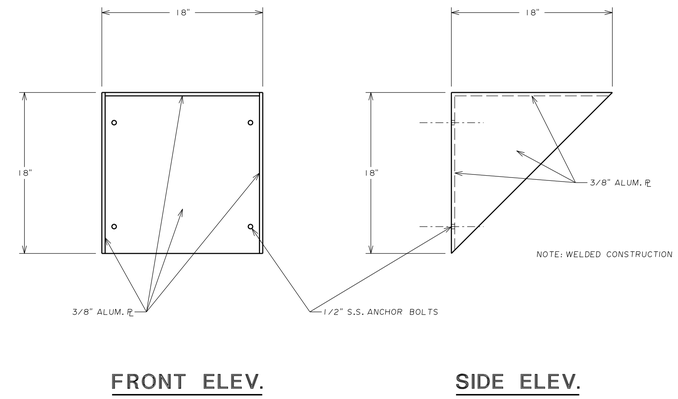

VALVE OPERATOR STAND

SCALE: NONE

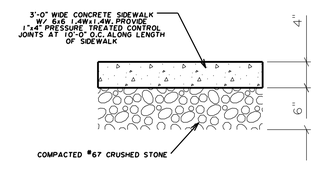

SIDEWALK DETAIL

SCALE: NONE

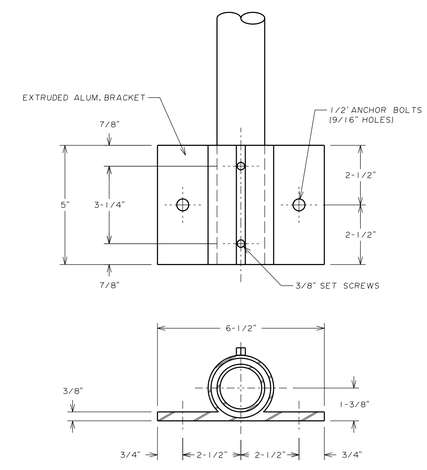

HANDRAIL DETAIL

SCALE: NONE

JAMES C. HAILEY & COMPANY
Consulting Engineers
Nashville, Tennessee 37221
PH: 615-883-4933 FAX: 615-883-4937
http://www.jchengr.com

RAW WATER INTAKE
DETAILS

LINCOLN COUNTY BOARD
OF PUBLIC UTILITIES
Lincoln County, Tennessee

PRELIMINARY
NOT FOR CONSTRUCTION

DESIGN	RNW
DRAWN	JAS
CHECKED	RNW
DATE	MAR. 2015
SCALE	AS NOTED
PROJECT NO.	07334
SHEET	D10

PROPERTY OF BRUCE ABELS
ET UX, SANDRA
D.B. W-12 PG. 120
TAX MAP # 93, PARCEL # 30

PT. @ THE LOW WATER MARK OF THE ELK RIVER

FLOW

ELK RIVER

TEMPORARY SAND BAG CUT-OFF FOR DEWATERING AND SEDIMENT CONTROL DURING CONSTRUCTION OF PIPE CHANNEL

DISTURBED AREA TO HAVE 1'-0" THICK RIP-RAP AT GRADE

CAISSON

2 - 24" Ø SCREENS

SCALE: 1"=10'

0 10 20 30 40

S39°35'26"E 129.76

S39°35'26"E 11.42'

1 1/2" RBS

58.83'

56.81'

85.63'

84.89'

S44°18'17"W 114.74'

657.5

656.5

656.5

5' SIDEWALK

RAW WATER INTAKE MCC FFE = 661.5

PROPOSED RAW WATER INTAKE STRUCTURE

CARBON FEED ROOM FFE = 657.0

5' WALK

EL.: 657.0

0.57 ACRES

PROPOSED 16' GRAVEL DRIVE w/DRAINAGE DITCH

TEMPORARY DEWATERING STRUCTURE SEE TDOT STD. DWG. EC-STR-1

PROPERTY OF LINCOLN COUNTY BOARD OF PUBLIC UTILITIES TAX MAP # 93, PARCEL # 30

16'

S51°14'47"E 205.01'

CONTRACTOR CONTINUE DRAINAGE DITCH/SWALE TO EXISTING DITCH

S50°39'29"W 51.10'

50' WIDE INGRESS & EGRESS & UTILITY EASEMENT

EXISTING 16' GRAVEL DRIVE

POINT ON A ROCK

S51°14'47"E 199.96'

N41°03'44"E 58.79'

115.95'

S51°14'47"E

15.04'

SFB * SFB * SFB *